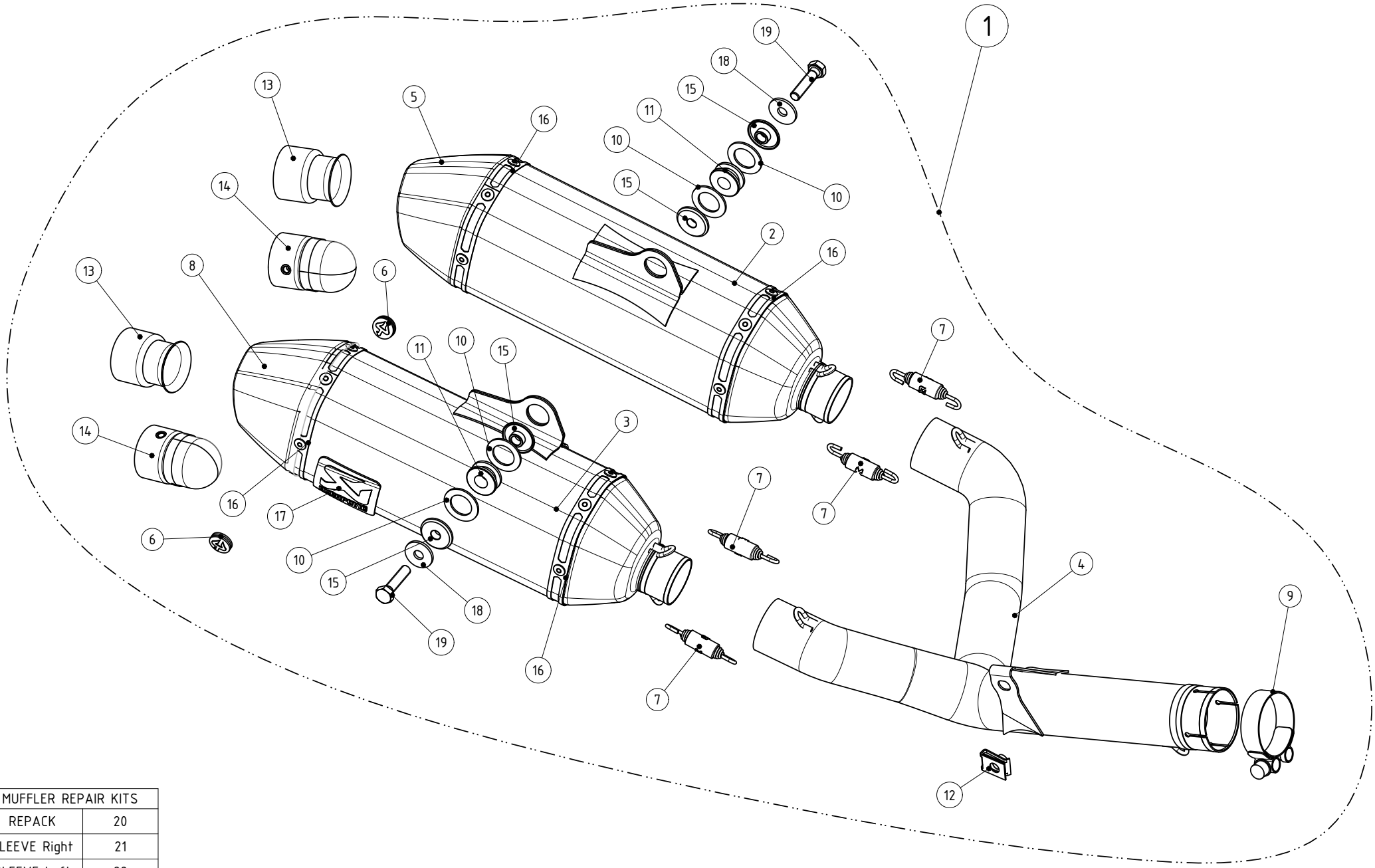


| MUFFLER REPAIR KITS | |
|---|---|
| REPACK | 20 |
| SLEEVE Right | 21 |
| SLEEVE Left | 22 |

REVIZIJA: DATUM REVIZIJE: